CerAl 3.2

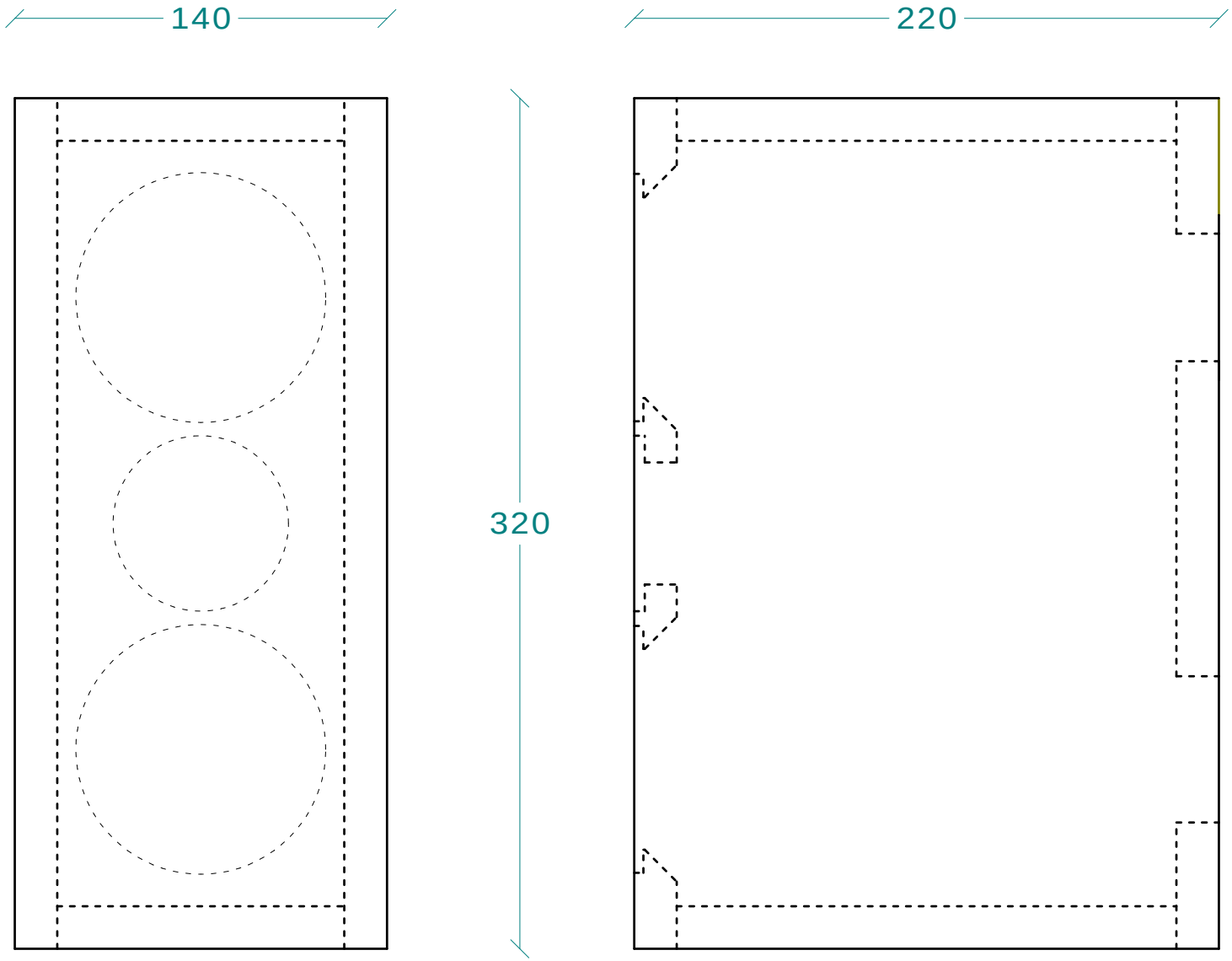

design & development Thorsten Fischer

(c) Niklas Baur, blue planet acoustic - www.oaudio.de